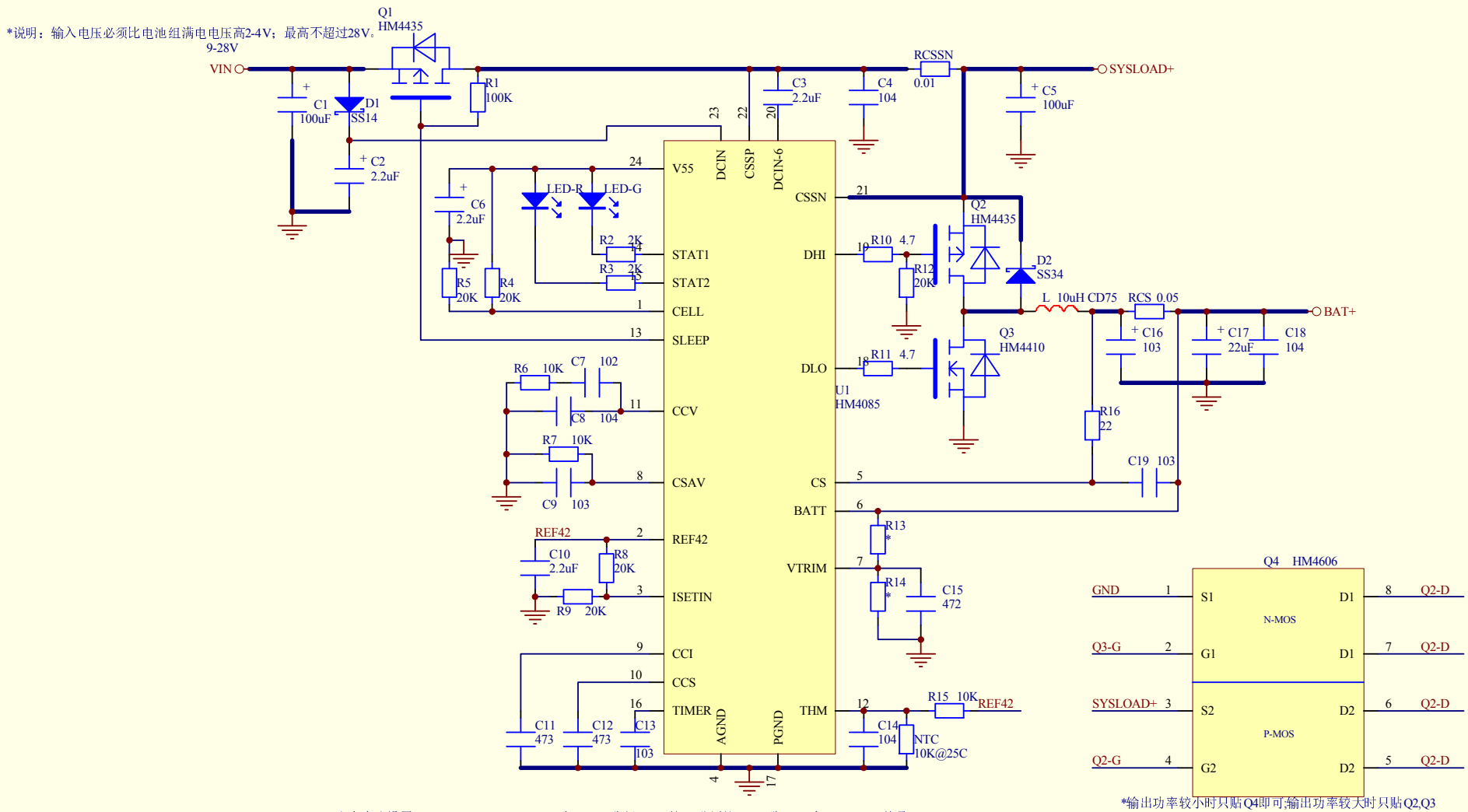

充电电流设置:ICH=VSETIN/(20*RSNS)，当ISETIN脚经R8/R9按1:1分压接REF42脚4.2V时，VSETTIN就是2.1V

充电时间设置:TCHARGE=CTTC*KTTC 10nF/4.66H

Title		
Size A4	Number	Revision
Date: 12-Dec-2017		Sheet of
File: G:\张春峰\做DEMO\DEMO.ddb		Drawn By: