Over Voltage and Over Current Protection IC

General Description

The HM9709 is an Over-Voltage-Protection(OVP) and programmable Over-Current-Protection (OCP) device. The device will switch off internal MOSFET to disconnect IN to OUT to protect load when any of input voltage, input current over the threshold. The Over temperature protection (OTP) function monitors chip temperature to protect the device.

The HM9709 is available in SOT-23-6, DFN-8 package. Standard products are Pb-free and Halogen-free.

Features

- Input Voltage Range: 3.5V to 36V
- Typical Output Power on Time: 9mS
- OVP Threshold: 6.1V
- OVP Threshold Time Less Than 1uS
- Programmable Current Limit up to 2.1A
- Low $R_{(DSON)}$ Internal Switches:130mΩ @ 5V /1A
- Output Discharge
- Thermal Fault Protection
- SOT23-6, DFN-8Package
- RoHS Compliant and 100% Lead (Pb)-Free

Order Information

HM9709 □□ □

- F: Pb-Free
- Package Type
  - MR:SOT23-6
  - DR:DFN-8

Applications

- GPS
- PMP
- PAD
- MID
- Digital cameras, Digital Videos

Typical Application Circuit

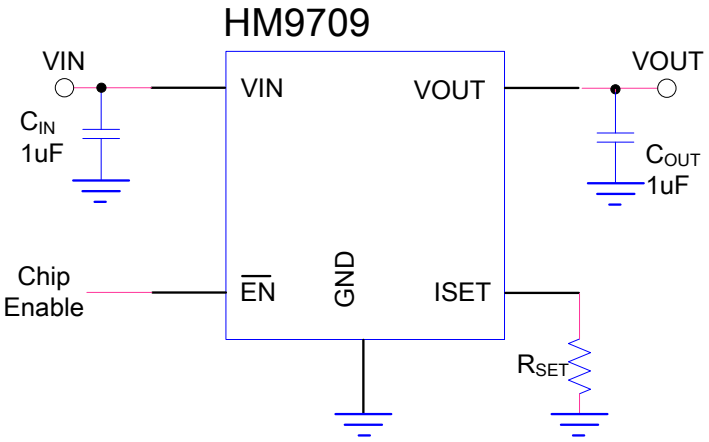

Marking Information

Device	Marking	Package	Shipping
HM9709MRF	9WYWX	SOT23-6	3K/REEL
HM9709DRF	HM9709D YWX	DFN-8	3K/REEL

Marking indication:

Y:Production year W:Production week X:Production batch

Functional Pin Description

Top View

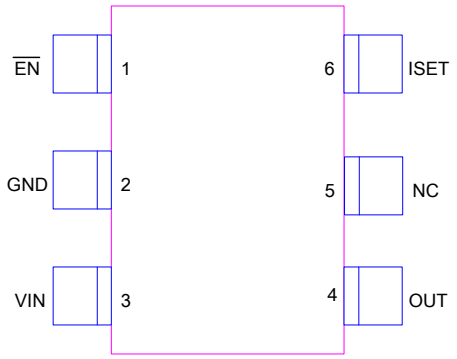

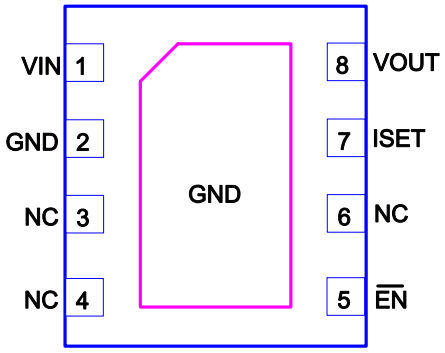

Pin Description

SOT23-6	DFN-8	PIN	DESCRIPTION
1	5	$\overline{EN}$	Chip enable pin. Active low.
2	2,PAD	GND	Ground.
3	1	VIN	Input pin. A 1uF low ESR ceramic capacitor or larger must be connected as close as to this pin. It is recommended to use 50V capacitor or according to application.
4	8	OUT	Output pin.
5	3,4,6	NC	No connector. These pin must be floating without connecting to GND or HIGH voltage.
6	7	ISET	Current program pin. Connect a resistor to ground.

Function Block Diagram

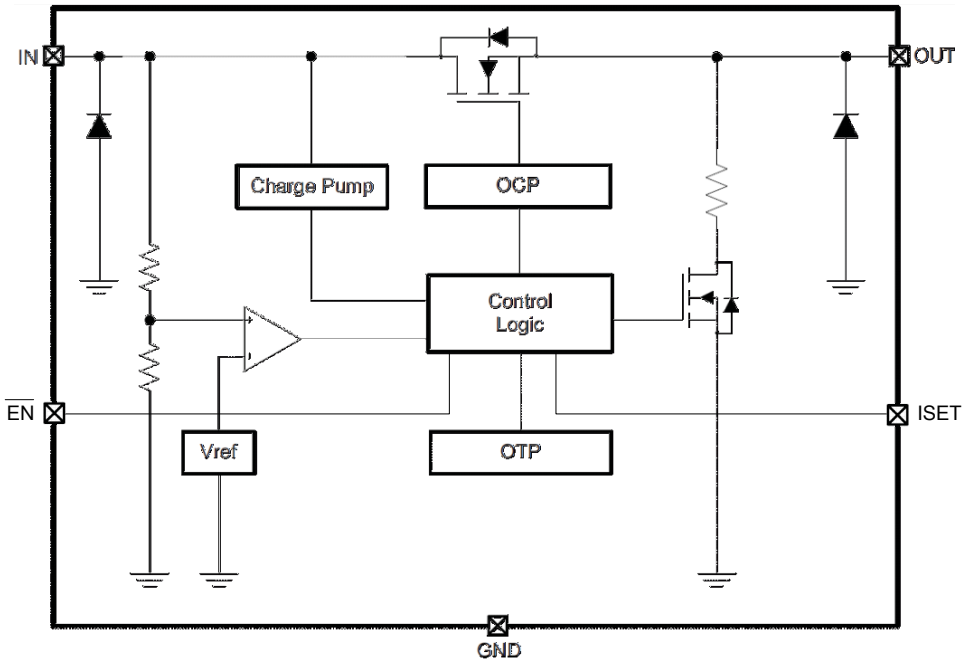

Absolute Maximum Ratings [Note 1]

- ✧ Input to GND ---------- 36V
- ✧ Output Voltage to GND ---------- 6.5V
- ✧ Other Pin to GND ---------- 6V
- ✧ Maximum Junction Temperature ---------- 125°C
- ✧ Operating Ambient Temperature Range (Ta) ---------- -40℃ to 85°C
- ✧ Maximum Soldering Temperature (at leads, 10 sec) ---------- 260°C

Note 1. Stresses beyond those listed under "Absolute Maximum Ratings" may cause permanent damage to the device. These are stress ratings only, and functional operation of the device at these or any other conditions beyond those indicated in the operational sections of the specifications is not implied. Exposure to absolute maximum rating conditions for extended periods may affect device reliability.

Thermal Information

- ✧ Maximum Power Dissipation (SOT23-6, PD,TA=25°C) ---------- 0.45W
- ✧ Thermal Resistance (SOT23-6, JA) ---------- 250℃/W
- ✧ Maximum Power Dissipation (DFN-8, PD,TA=25°C) ---------- 1.5W
- ✧ Thermal Resistance (DFN-8, JA) ---------- 46℃/W

ESD Susceptibility

- ✧ HBM(Human Body Mode) [Note 2] ---------- 2KV
- ✧ MM(Machine Mode) [Note 3] ---------- 200V

Note 2. The Human body model (HBM) is a 100pF capacitor discharged through a 1.5kΩ resistor into each pin. The testing is done according JEDEC.

Note 3. Machine Model (MM) is a 200pF capacitor discharged through a 500nH inductor with no series resistor into each pin. The testing is done according JEDEC.

Electrical Characteristics

(Typical values are TA=25℃)

Symbol	Parameter	Conditions	HM9709			Unit
			Min.	Typ.	Max.	
DC characteristics and Power-ON-Reset						
VIN	Input Voltage		3.5		36	V
I_Q	Input quiescent current	VIN =5V, EN=LOW, IOUT =0A		110		uA
I_{SD}		VIN =5V, EN=HIGH, IOUT =0A			1	
R_{ON}	IN-to-OUT ON resistance	VIN =5V, IOUT =1A		130		mΩ
$R_{DISCHARGE}$	Output discharge resistance			4.3		kΩ
$V_{EN(L)}$	Enable Threshold Low	Chip enable			0.4	V
$V_{EN(H)}$	Enable Threshold High	Chip shutdown	1.4		5	V
UVLO	Under voltage lock out threshold	VIN increasing from 0~5V	2.6	2.8	3	V
$V_{HYS-UVLO}$	Under voltage lock out hysteresis	VIN decreasing from 5~0V		500		mV
T_{ON}	Output power-on time	EN = LOW ,		9		mS
	Turn on through EN	EN = HIGH -> LOW,		9		
Input Over-Voltage-Protection (OVP)						
V_{OVP}	OVP threshold	VIN increasing from 5~7V	5.8	6.1	6.4	V
$V_{HYS-OVP}$	OVP hysteresis	VIN decreasing from 7~5V		150		mV
T_{OVP}	OVP active time	VIN = 5 -> 10V			1	uS
$T_{ON(OVP)}$	OVP recovery time	VIN = 10 -> 5V to output ON		9		mS
Input Over-Current-Protection (OCP)						
I_{OCP}	OCP threshold	Rset=51K		1.9		A
		Rset=82K		1.3		
		Rset=150K		0.85		
$I_{OCPLIMIT}$	OCP LIMIT Current	Rset=NC	2.1	2.5		A
T_{OCP}	OCP active time			30		mS
V_{ISET}	ISET Voltage			0.8		V
$T_{ON(OCP)}$	OCP recovery time			1		S
Over-Temperature-Protection (OTP)						
OTP threshold				150		℃
OTP hysteresis				40		℃

Typical Operating Characteristics

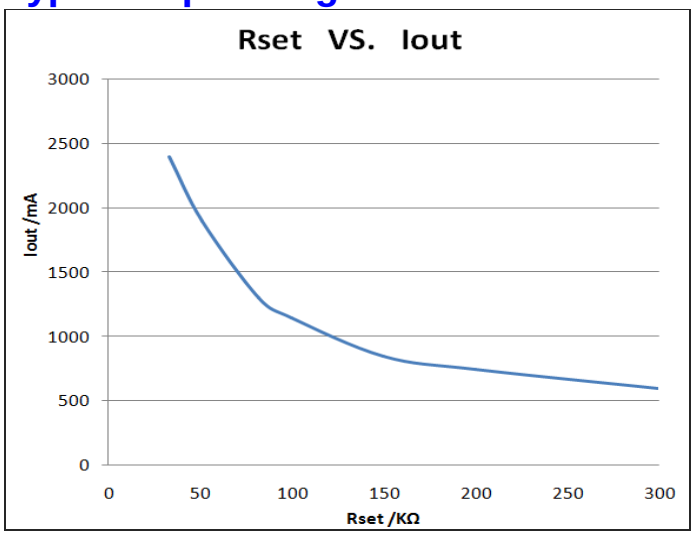

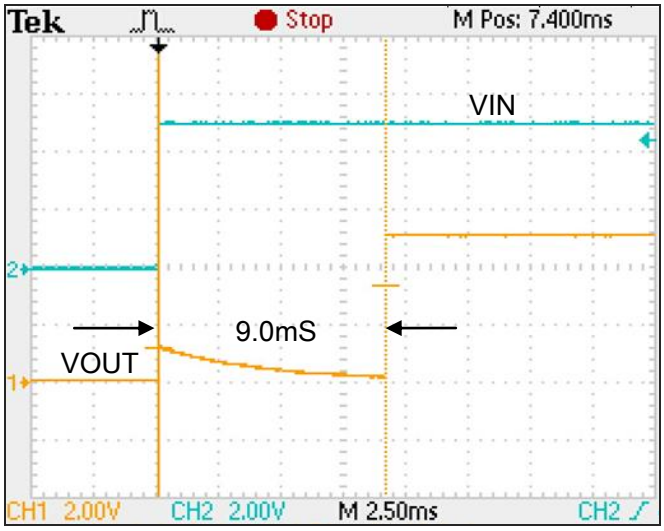

Turn on with EN=0V

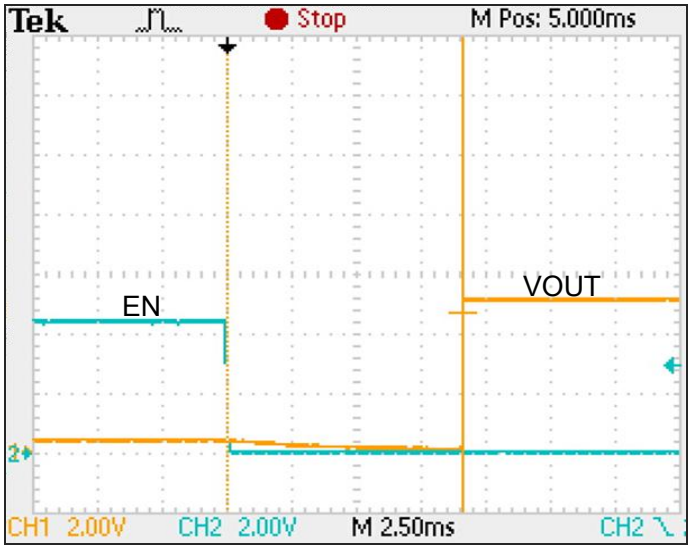

Turn on with VIN=5V

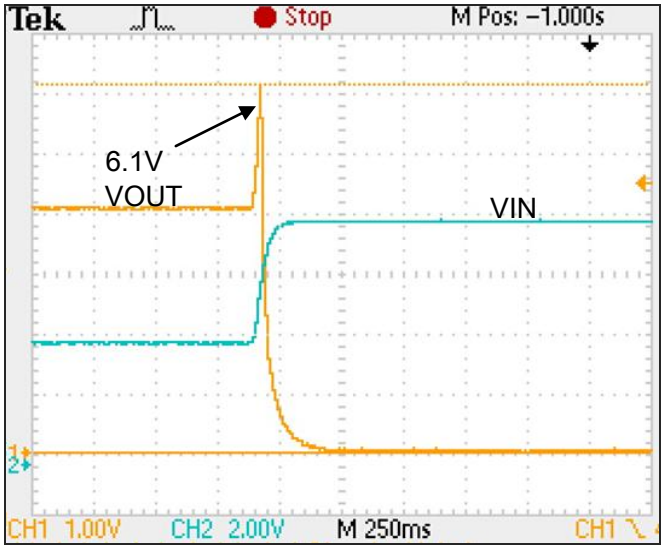

OVP waveform

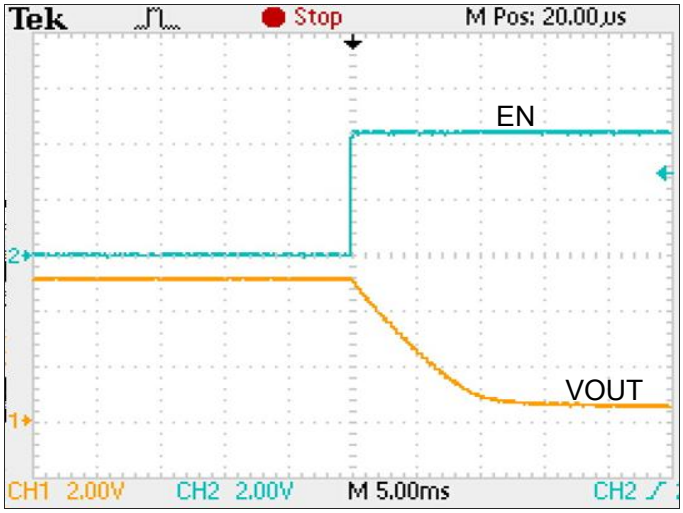

Turn off waveform with Iout=0A

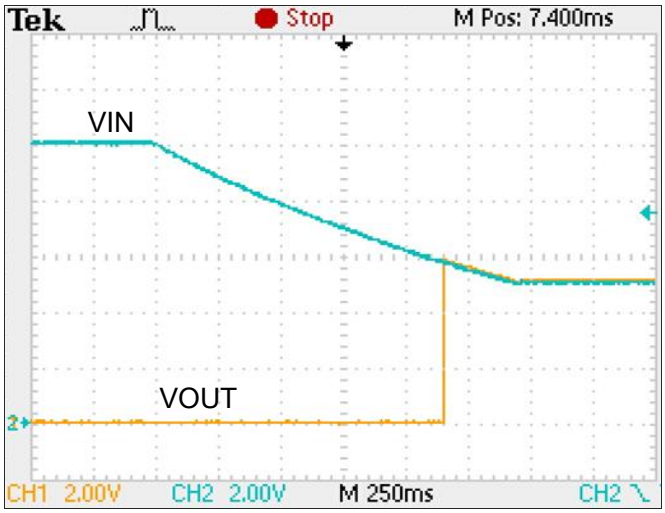

VIN falling waveform

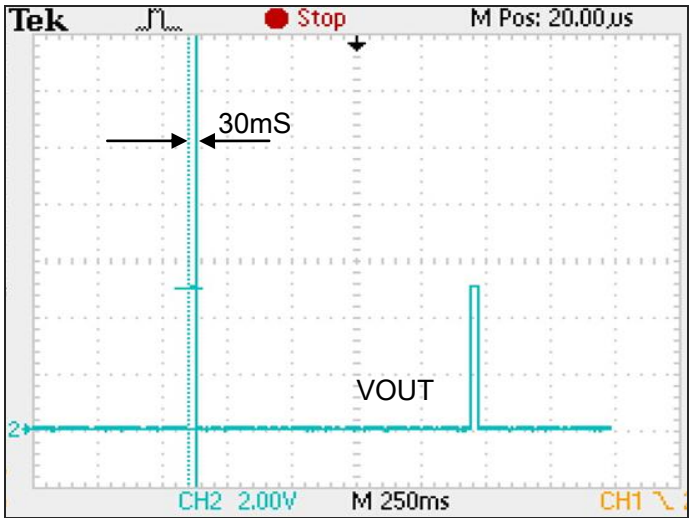

OCP detection time

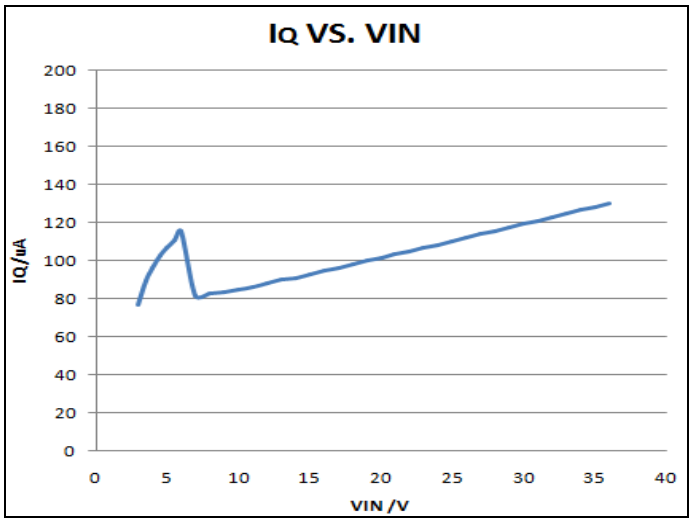

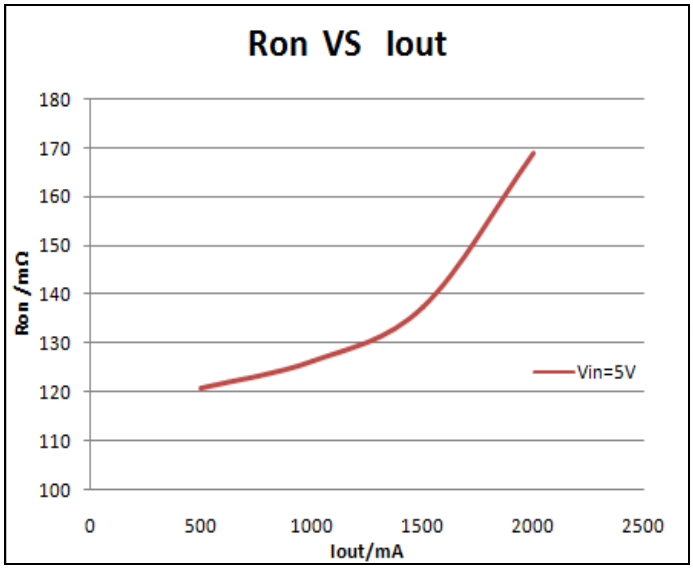

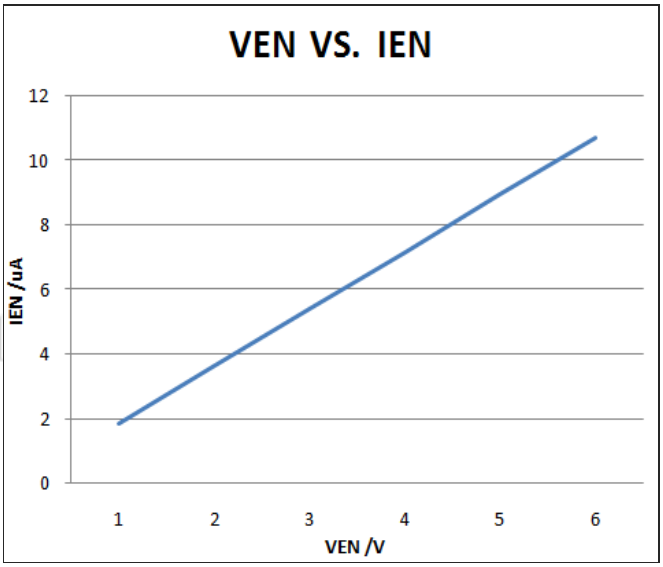

Packaging Information

SOT23-6

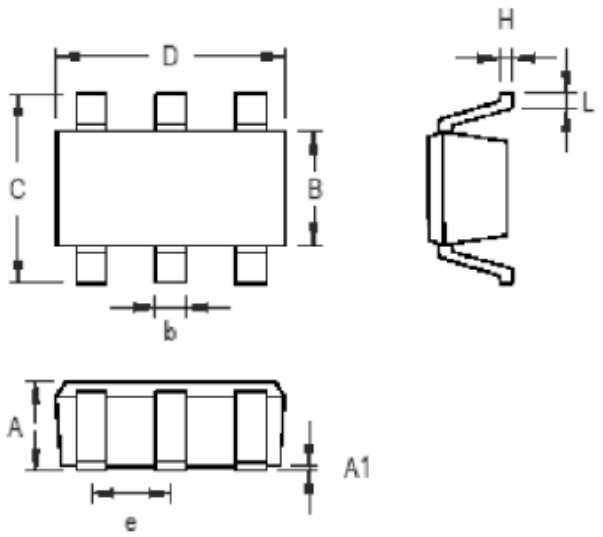

Symbol	Dimensions In Millimeters		Dimensions In Inches	
	Min	Max	Min	Max
A	0.889	1.295	0.031	0.051
A1	0.000	0.152	0.000	0.006
B	1.397	1.803	0.055	0.071
b	0.250	0.560	0.010	0.022
C	2.591	2.997	0.102	0.118
D	2.692	3.099	0.106	0.122
e	0.838	1.041	0.033	0.041
H	0.080	0.254	0.003	0.010
L	0.300	0.610	0.012	0.024

SOT-23-6 Surface Mount Package

DFN-8

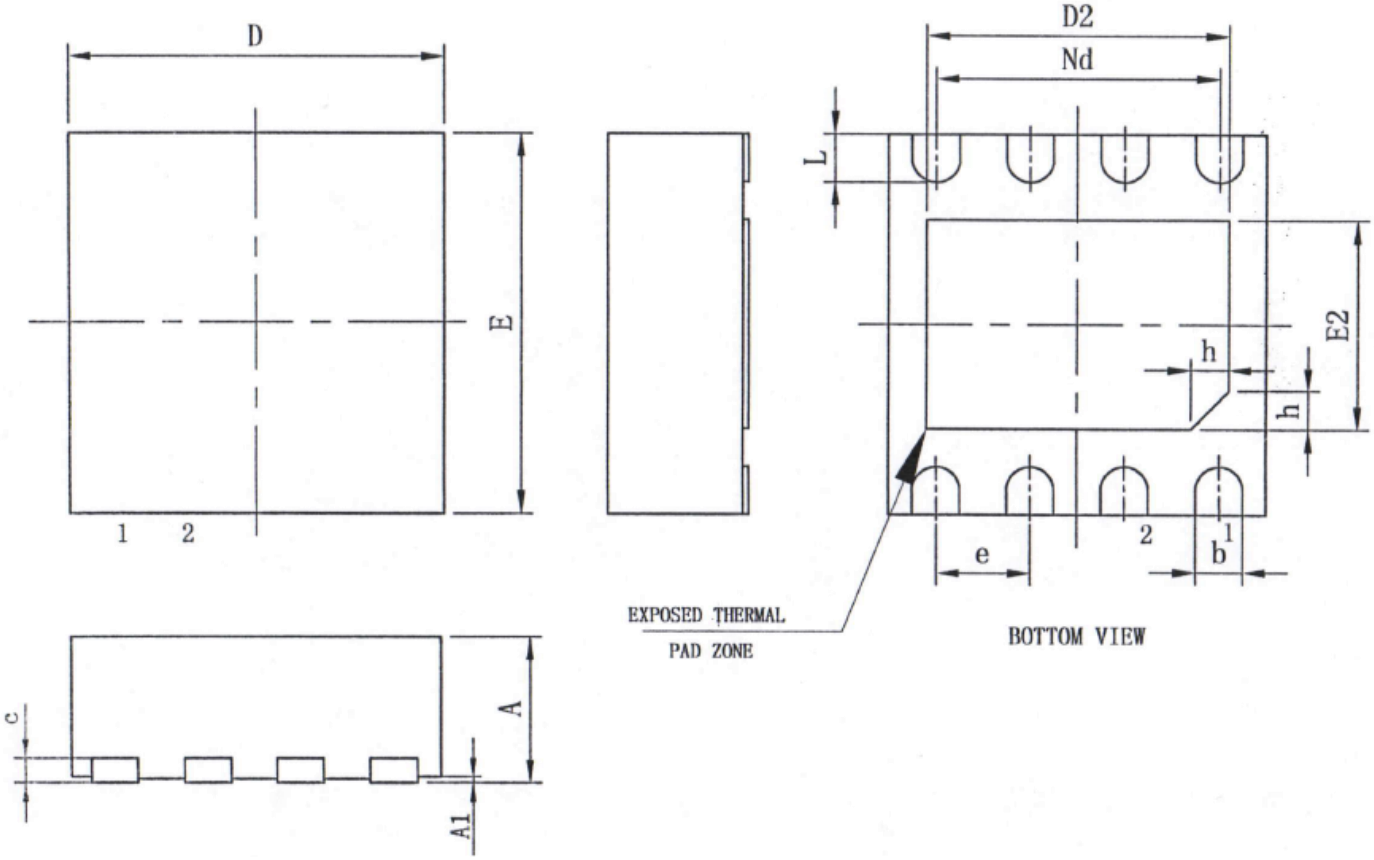

SYMBOL	MILLIMETER		
	MIN	NOM	MAX
A	0. 70	0.75	0. 80
A1	—	0.02	0. 05
b	0. 18	0.25	0. 30
c	0. 18	0.20	0. 25
D	1. 90	2. 00	2. 10
D2	1. 50	1. 60	1. 70
e	0. 50BSC		
Nd	1. 50BSC		
E	1. 90	2. 00	2. 10
E2	1. 00	1. 10	1. 20
L	0. 20	0.25	0. 30
h	0. 15	0. 20	0. 25